Current part is item (11) on diagram. Available at www.oshkoshequipment.com

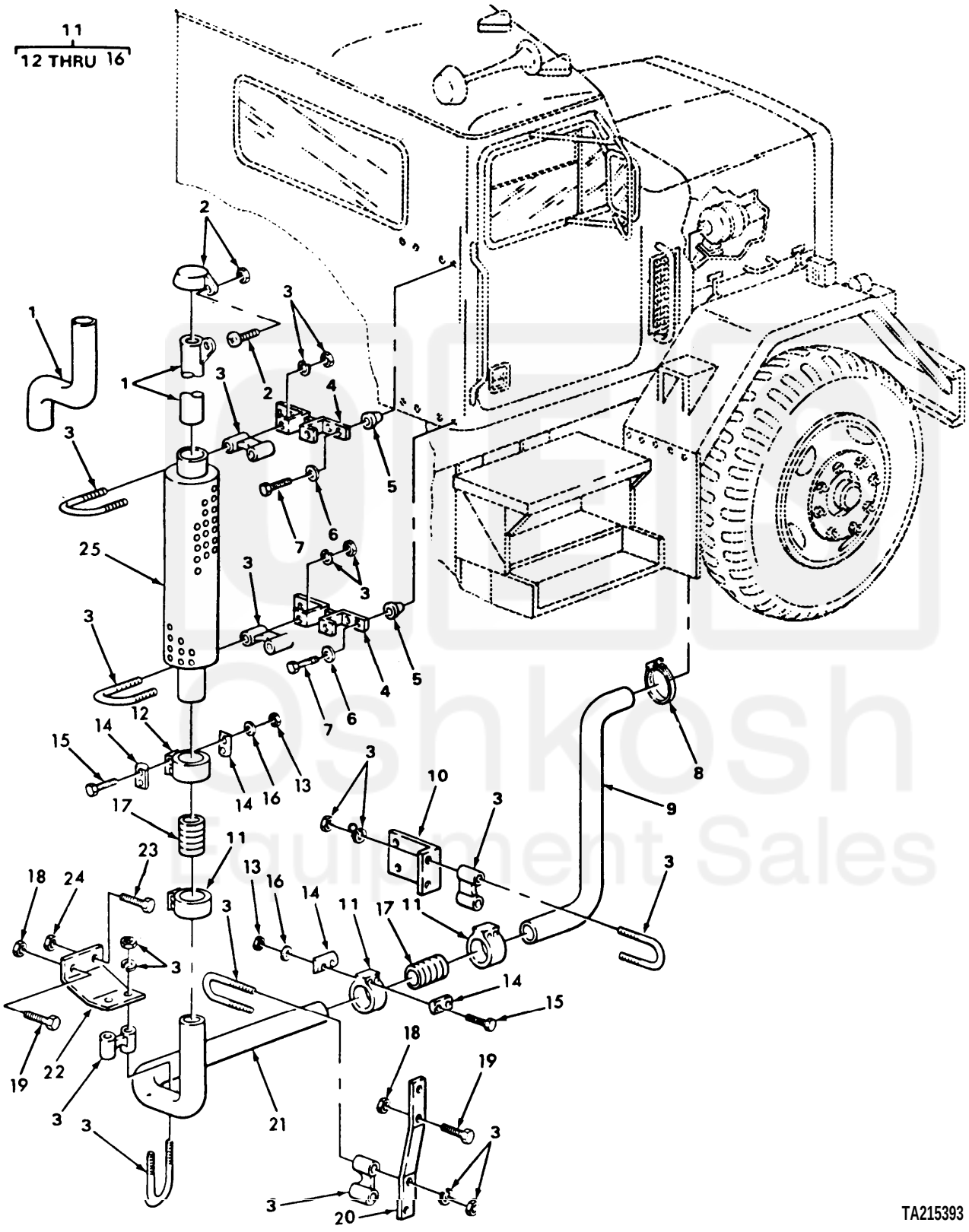

FIGURE 18. EXHAUST SYSTEM.

Current part is item (11) on diagram. Available at www.oshkoshequipment.com

Current part is item (11) on diagram. Available at www.oshkoshequipment.com

(1) ITEM NO	(2) SMR CODE	(3) FSCM	(4) PART NUMBER	(5) DESCRIPTION AND USABLE ON CODE (UOC)	(6) QTY
				GROUP:04 EXHAUST SYSTEM	
				GROUP:0401 MUFFLER AND PIPES	
				FIGURE 18. EXHAUST SYSTEM.	
1	PAOZZ	34623	MB241A-20003	PIPE,EXHAUST	1
				UOC:U21,U22,U24,U26	
1	PAOZZ	34623	MC241A-20006	PIPE,EXHAUST	1
				UOC:U23	
2	PAOZZ	97907	9148003	CAP ASSEMBLY,PROTEC	1
3	PAOZZ	01652	U-500	CLAMP,LOOP	5
4	PAOZZ	34623	MC32-20058	BRACKET ASSEMBLY	2
5	PAOZZ	76005	J7153-1	BUSHING,RUBBER	8
6	PAOZZ	34623	M/362-20018	WASHER,FLAT	8
7	PAOZZ	24617	9425098	SCREW,CAP,HEXAGON	8
8	PAOZZ	15434	186917	CLAMP,HOSE	1
9	PAOZZ	34623	M-D241A-20001	PIPE,EXHAUST	1
				UOC:U21	
9	PAOZZ	34623	ME241A-20004	PIPE,EXHAUST	1
				UOC:U22,U23,U24,U25,U26	
10	PBOZZ	34623	MC10-20079	BRACKET,ANGLE	1
				UOC:U21	
10	PAOZZ	34623	MC10-20100	BRACKET,SPECIAL	1
				UOC:U22,U23,U24,U25,U26	
11	PAOZZ	61393	1430-50A	CLAMP,LOOP	3
12	PAOZZ	C1393	1431-50A	.COUPLING, REDUCER	1
13	XAOZZ	34623	MA217-21015	.NUT,PLAIN,HEXAGON	2
14	XAOZZ	34623	1244	.SPACER	2
15	XAOZZ	34623	1267	.BOLT,MACHINE	2
16	XAOZZ	96906	MS27183-12	.WASHER,FLAT	8
17	PAOZZ	34623	M-B241A-20002	HOSE,METALLIC	2
18	PAOZZ	34623	M/219B20002	NUT,PLAIN,EXTENDED	3
19	PAOZZ	34623	M/25-20016	BOLT,MACHINE	3
20	PAOZZ	34623	MC294-20001	SUPPORT,FRONT,MUFFL	1
21	PAOZZ	34623	MD241A-20000	PIPE,EXHAUST	1
				UOC:U21	
21	PAOZZ	34623	M-D241A-20005	PIPE,EXHAUST	1
				UOC:U22,U23,U24,U25,U26	
22	PAOZZ	34623	MC32-20052	BRACKET,MUFFLER,REA	1
23	PBOZZ	34623	M/25-20004	SCREW,CAP,HEXAGON	1
				UOC:U22,U23,U24,U25,U26	
24	PAOZZ	34623	M/219B-20001	NUT,PLAIN,EXTENDED	1
				UOC:U22,U23,U24,U25,U26	
25	PAOZZ	76700	18861-N	MUFFLER,EXHAUST	1
				END OF FIGURE	

Current part is item (11) on diagram. Available at www.oshkoshequipment.com